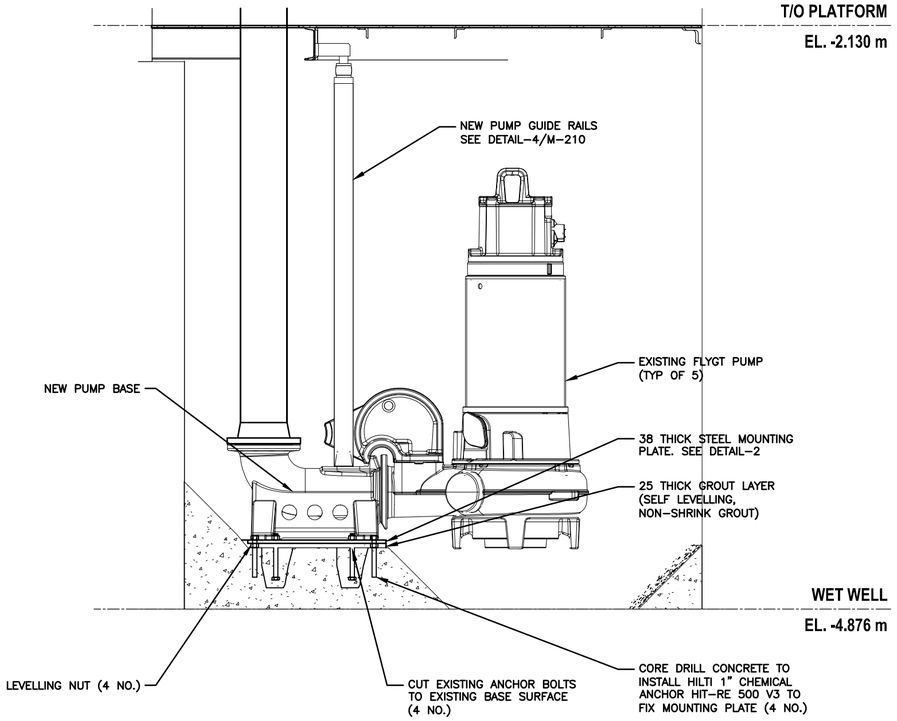

PUMP BASE AND MOUNTING PLATE (1 / M-208)
SCALE: NTS

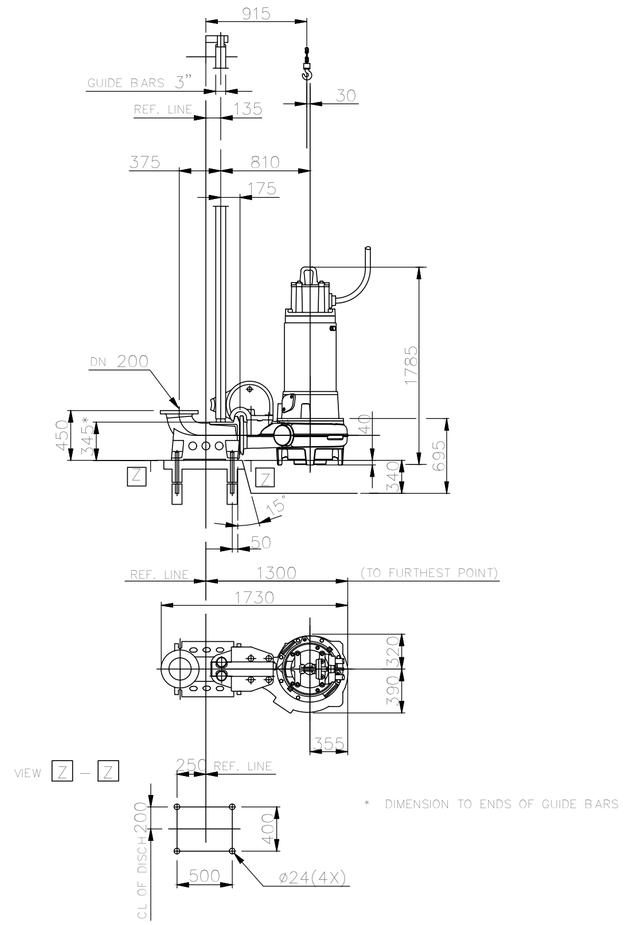

PUMP BASE AND SUPPORT DETAIL (3 / M-208)
SCALE: NTS

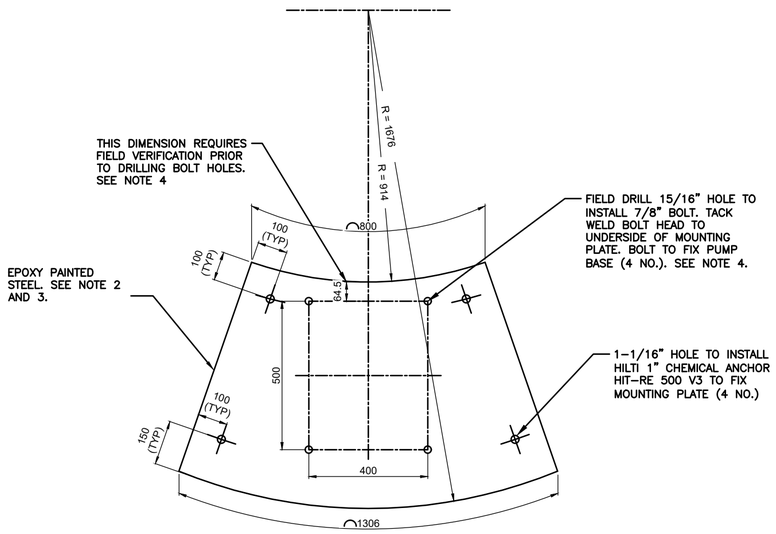

STEEL MOUNTING PLATE DETAIL (TYP 5 NO.) (2 / M-208)
SCALE: NTS

NOTES

1. DIMENSIONS SHOWN IN mm UNLESS NOTED OTHERWISE.
2. STEEL FOR MOUNTING PLATE: ASTM C1045.
3. FOR REQUIREMENTS FOR EPOXY PAINT COATING REFER TO SPECIFICATIONS.
4. FIELD VERIFY LOCATION OF EXISTING PUMP AND PUMP BASES TO POSITION BASE PLATE ON MOUNTING PLATE. VERIFY PROPOSED PUMP BASE POSITION MATCHES EXISTING LOCATION PRIOR TO DRILLING PUMP BASE HOLES.

DRAWING NO.	TITLE	REV	DATE	DESCRIPTION	DRN	CHK	APP
		1	DEC 2021	ISSUED FOR CONSTRUCTION	JH	JG	JG
–	–	0	JUN 2021	ISSUED FOR CONSTRUCTION	SS	JG	JG

REFERENCE DRAWINGS — REVISIONS

REGIONAL DISTRICT OF NANAIMO

PROFESSIONAL ENGINEER — J. G. GERWIEN # 213214 — BRITISH COLUMBIA — 2021-12-23
CH2M Hill Canada Limited
Permit to Practice No. 1000970

PROJECT NAME	CHASE RIVER FORCEMAIN NO. 1 REPLACEMENT AND PUMP STATION UPGRADES		
DRAWN: SS	CHASE RIVER PUMP STATION MECHANICAL		JACOBS
DESIGNED: MP			
CHECKED: JG	PUMP BASE DETAILS		PROJECT NO.: 707564 / SCALE: NTS
APPROVED: JG	DRAWING NUMBER: CRPS-M-216	SHEET: –	DATE: JUNE 2021 / REV: 1