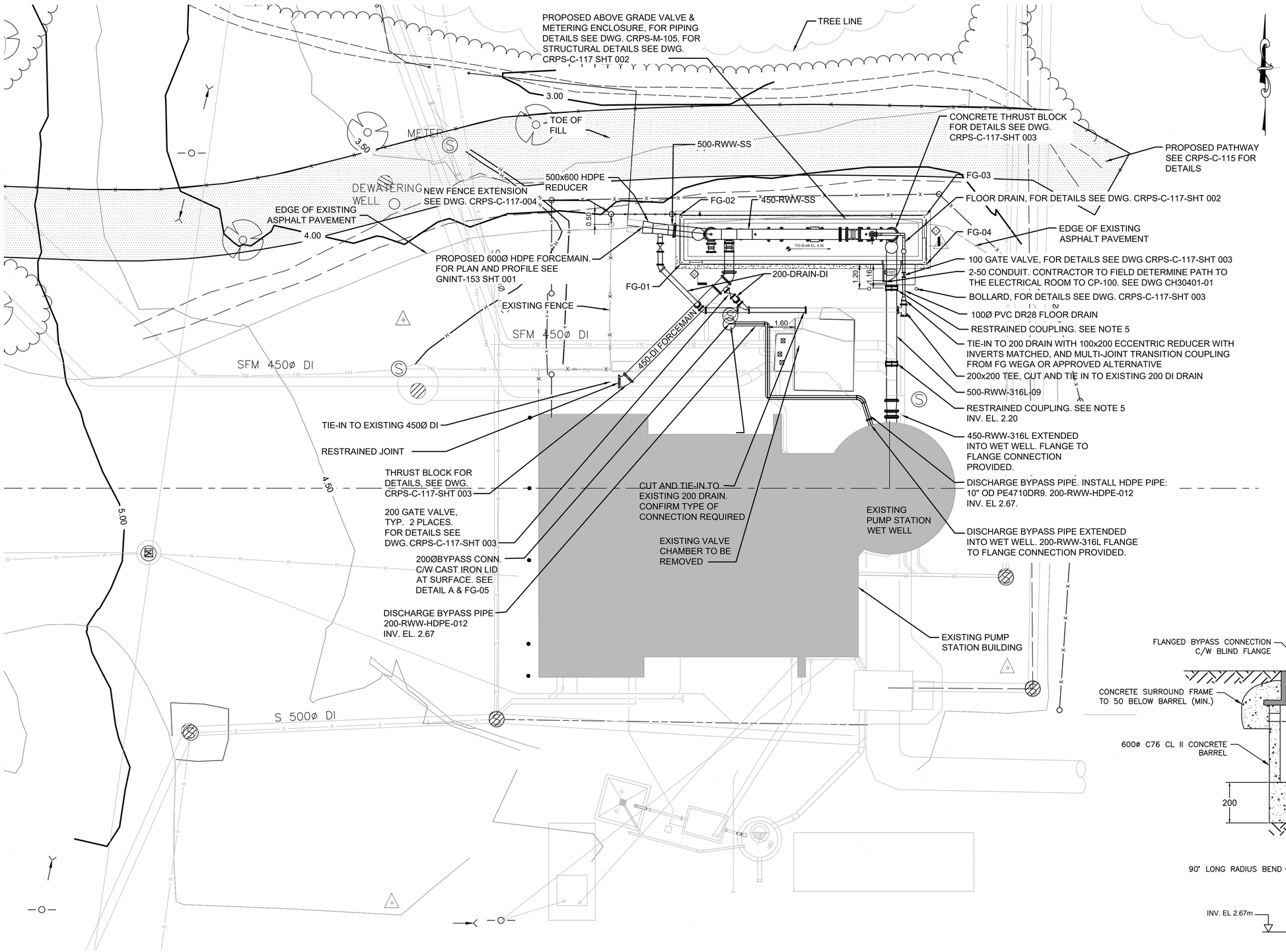

PUMP STATION SITE PLAN
1:100

FINISHED GRADE POINT SCHEDULE				
FG NUMBER	GROUND COORDINATES (UTM-10) NORTHING	EASTING	ELEVATION (m)	REMARKS
FG-01	5444583.6957	432965.3134	4.300	ENCLOSURE CORNER
FG-02	5444586.1357	432965.3134	4.300	ENCLOSURE CORNER
FG-03	5444586.1357	432977.5034	4.300	ENCLOSURE CORNER
FG-04	5444583.6957	432977.5034	4.300	ENCLOSURE CORNER
FG-05	5444580.7617	432967.7520	4.300	MANHOLE COVER CENTRE

NOTES:

1. ALL DIMENSIONS SHOWN IN PLAN AND COORDINATES ARE METRIC MEASUREMENTS AND ARE IN METERS. ALL PIPE, FITTINGS AND VALVE DIMENSIONS ARE IN MILLIMETERS. COORDINATES ARE FOUND LEVEL (UTM NAD 83 WITH COMBINED SCALE FACTOR OF 1/0.99965) AND ALL ELEVATIONS ARE GEODETIC DATUM.
2. THE CONTRACTOR SHALL VERIFY ON SITE ALL THE EXISTING FIELD CONNECTIONS, DIMENSIONS AND ELEVATIONS PRIOR TO COMMENCING WORK. ANY DISCREPANCY SHALL BE REPORTED TO THE OWNER'S REPRESENTATIVE IMMEDIATELY. DO NOT SCALE DRAWINGS.
3. FOR CIVIL AND STRUCTURAL NOTES REFER TO NOTES AND SPECIFICATION SHEET, GNINT-152 SHEET 001.
4. SURFACES TO BE RESTORED TO MATCH ADJACENT PAVEMENT.
5. RESTRAINED COUPLINGS TO BE FLEXIBLE GROOVED COUPLING STYLE W77AGS.

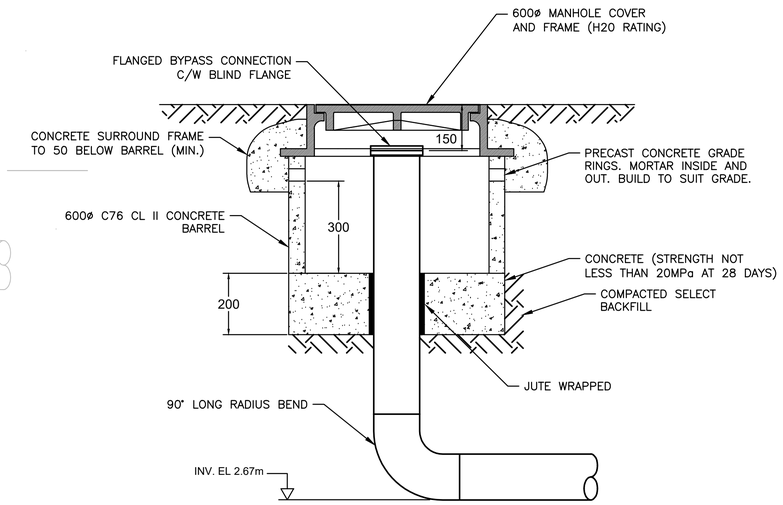

DETAIL A

DRAWING NO.	TITLE	REV	DATE	DESCRIPTION	DRN	CHK	APP
CH30401-01							
CRPS-M-105	ABOVE GRADE VALVE AND METERING ENCLOSURE: PLAN AND SECTION VIEWS	4	JAN 2022	ISSUED FOR CONSTRCUTION	JH	JG	JG
GNINT-153 SHT 001	FORCEMAIN NO.1 & WATER REPLACEMENT-PLAN AND PROFILE	3	JUN 2021	ISSUED FOR CONSTRUCTION	JH	JG	JG
CRPS-C-117 SHT 002	VALVE AND METERING ENCLOSURE - FOUNDATION PLAN, SECTION AND DETAILS	2	JUN 2021	ISSUED FOR INFORMATION	SS	JH	JG
CRPS-C-117 SHT 003	VALVE AND METERING ENCLOSURE - SECTIONS AND DETAILS	1	AUG 2019	ISSUED FOR CONSTRUCTION	JH	MC	JG
CRPS-C-117 SHT 004	TYPICAL FENCING DETAILS	0	APR 2019	ISSUED FOR TENDER	RO	LC	JG

REFERENCE DRAWINGS — REVISIONS

REGIONAL DISTRICT OF NANAIMO

PROFESSIONAL ENGINEER — PROVINCE OF BRITISH COLUMBIA — J. G. GERWIEN # 213214 — 2022-01-17

PROJECT NAME: CHASE RIVER FORCEMAIN NO. 1 REPLACEMENT AND PUMP STATION UPGRADES

DRAWN: SS
DESIGNED: MP
CHECKED: CW
APPROVED: JG

CHASE RIVER PUMP STATION UPGRADES SITE PLAN

JACOBS

DRAWING NUMBER: CRPS-C-117
SHEET: 001
PROJECT NO.: 707564
SCALE: 1:100
DATE: FEB 04, 2019
REV: 4

FILE NAME: C:\PW_WORKDIR\DEN003\CH2MHILL_JHOSEGOOD0478214\CRPS-C-117-SHT-001-PS SITE PLAN.DWG PLOT DATE: 13/Jan/2022 PLOT BY:Hosegood, Jonathan/VBC PLOT STYLE: CH2M.ctb