VALVE SIZE INCH	VALVE SIZE MM	A	B	C	D	E	F	G	H	J	K	L
		DIMENSIONS INCHES/MILLIMETERS										
3	80	.83/21	8.00/203	3.56/90	6.00/152	5/8–11 UNC	4	.81/21	N/A	N/A	8.00/203	10.19/259
4	100	1.02/26	9.00/229	4.43/113	7.50/191	5/8–11 UNC	4	.62/16	.75/19	4	8.62/219	10.81/275
5	125	1.04/26	10.50/267	5.79/147	8.50/216	3/4–10 UNC	4	.69/18	3/4–10 UNC	4	9.75/248	11.94/303
6	150	1.04/26	10.50/267	5.79/147	9.50/241	3/4–10 UNC	4	.69/18	.88/22	4	9.75/248	11.94/303
8	200	1.23/31	11.50/292	7.65/194	11.75/298	3/4–10UNC	4	.75/19	.88/22	4	12.09/307	14.28/363
10	250	1.30/33	13.00/330	9.19/233	14.25/362	7/8 – 9 UNC	8	.66/17	1.00/25	4	13.50/343	15.69/399
12	300	1.36/35	14.00/356	11.53/293	17.00/432	7/8 – 9 UNC	8	.75/19	1.00/25	4	15.56/395	17.75/451

ACTUATOR NUMBER	DIM IN/MM R
GS–6A–HD8	8.00/203
GS–6A–HD12	12.00/305

A	VALVE
B	ACTUATOR
P	CONNECTING PARTS

NOTE:

1. FLANGES ARE FLAT FACED WITH THICKNESS, DIAMETER AND DRILLING TO CLASS 125 ANSI STANDARD B16.1, EXCEPT FOR TAPPED HOLES AS INDICATED. SEE A55467 FOR NON–ANSI FLANGE DATA.
2. 13 TURNS OF HANDWHEEL ARE REQUIRED TO OPEN VALVE.
3. INSTALLATION NOTE:
   - FOR LIQUIDS & GASES: INSTALL VALVE WITH HIGHER PRESSURE AGAINST END OPPOSITE SEAT.
   - FOR SUSPENDED SOLIDS, SLURRIES, ETC: INSTALL VALVE WITH HIGHER PRESSURE AGAINST SEAT END. IN HORIZONTAL PIPELINES, VALVE SHOULD BE INSTALLED ON IT'S SIDE SO PLUG ROTATES TO THE TOP OF THE PIPELINE WHEN OPEN. (SEE DIAGRAM BELOW).

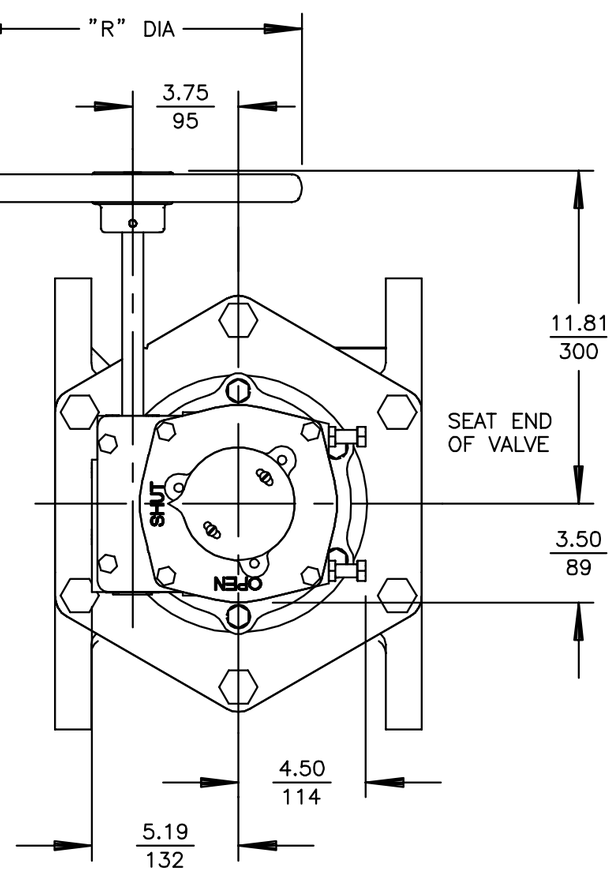

NOTICE
THIS DRAWING DOES NOT SHOW ACTUATOR ACCESSORIES. IF ACCESSORIES ARE REQUIRED, REFER TO THE APPROPRIATE ACCESSORY INSTALLATION DRAWING FOR DIMENSIONS AND OTHER RELATED INFORMATION.

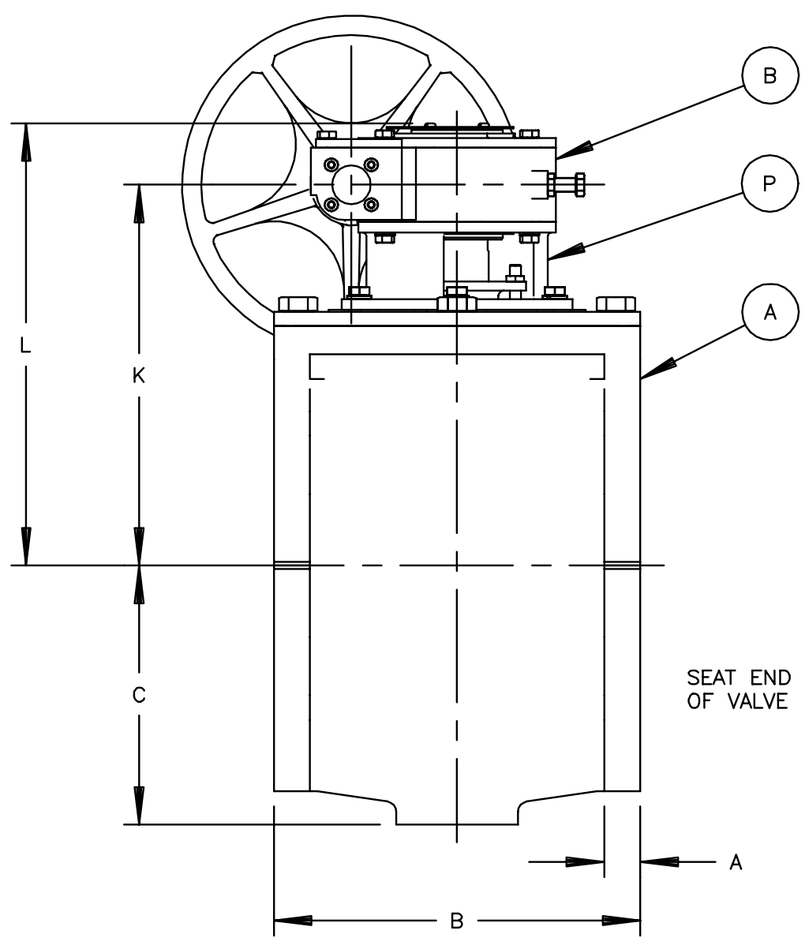

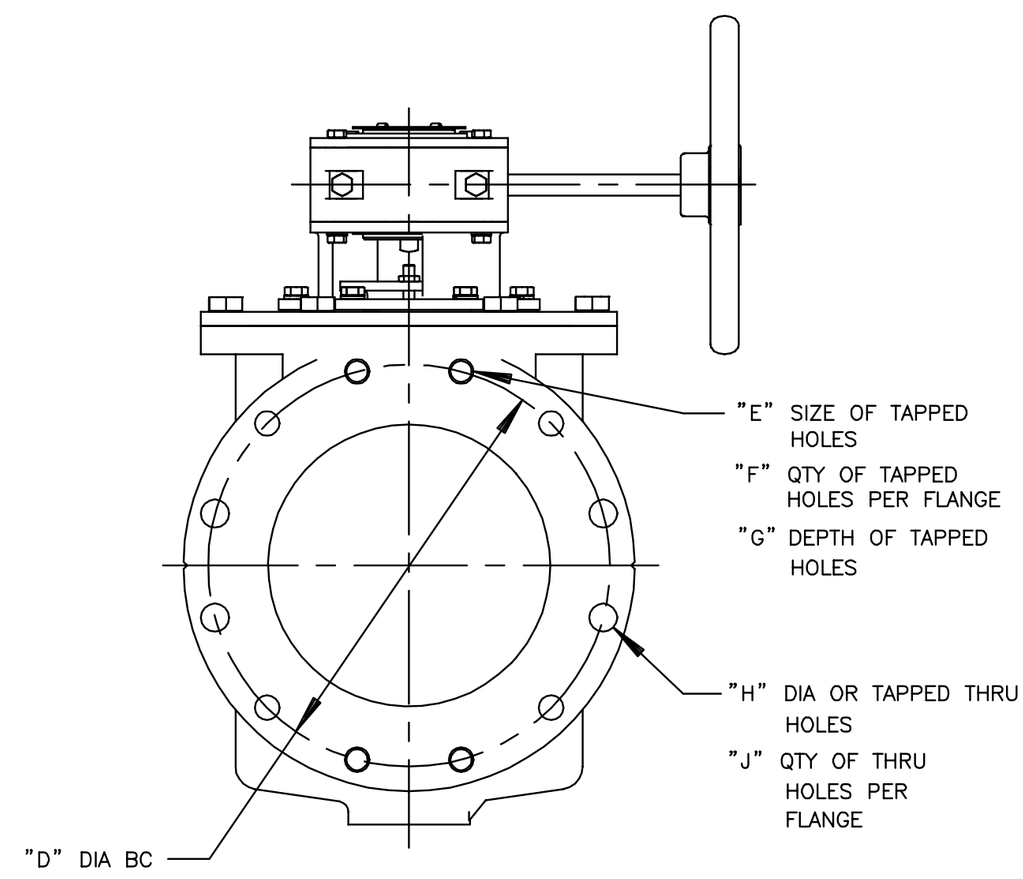

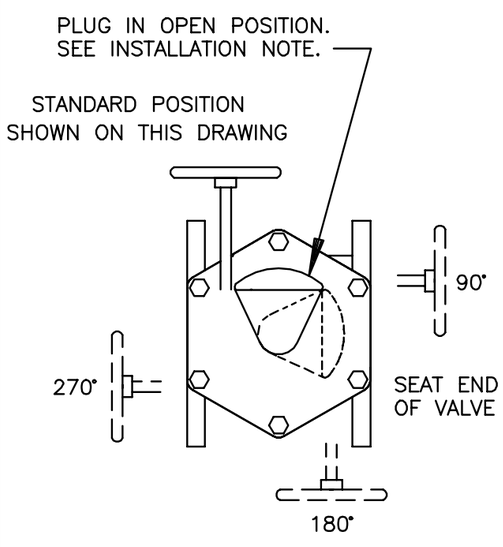

ACTUATOR MOUNTING POSITIONS AS VIEWED FROM TOP OF VALVE. DOTTED LINES SHOW OPTIONAL MOUNTING POSITIONS.

G	F	E	D	C	B	A 61483	03/14/07

DeZURIK
Sartell, MN USA 56377
www.dezurik.com

PEF 100% PORT ECCENTRIC VALVES SIZE 3 – 12 FLANGED
GS–6A–HD_ HANDWHEEL ACTUATED

DOCT. CODE	DRAWN	APPROVED	
C1	SN	SN	A55432
	CHECKED SN	DATE 10/17/05	