NOTES:

1. PLUG VALVES TO BE ORIENTATED WITH SEAT IN UPWARD POSITION.
2. INSTALL NEW PUMP DISCHARGE PIPING, VALVES, FITTINGS AND SUPPORTS.
3. UNLESS NOTED OTHERWISE ALL DIMENSIONS ARE IN MILLIMETERS.
4. EXTENT OF CONTRACT. CONFIRM PIPE ELEVATION AND REFERENCE DIMENSIONS. NOTE RAISED FLANGE HAS BEEN INSTALLED.
5. DO NOT SCALE DIMENSIONS, IN CASE OF ANY CONFUSION, CONTACT ENGINEER-IN-CHARGE

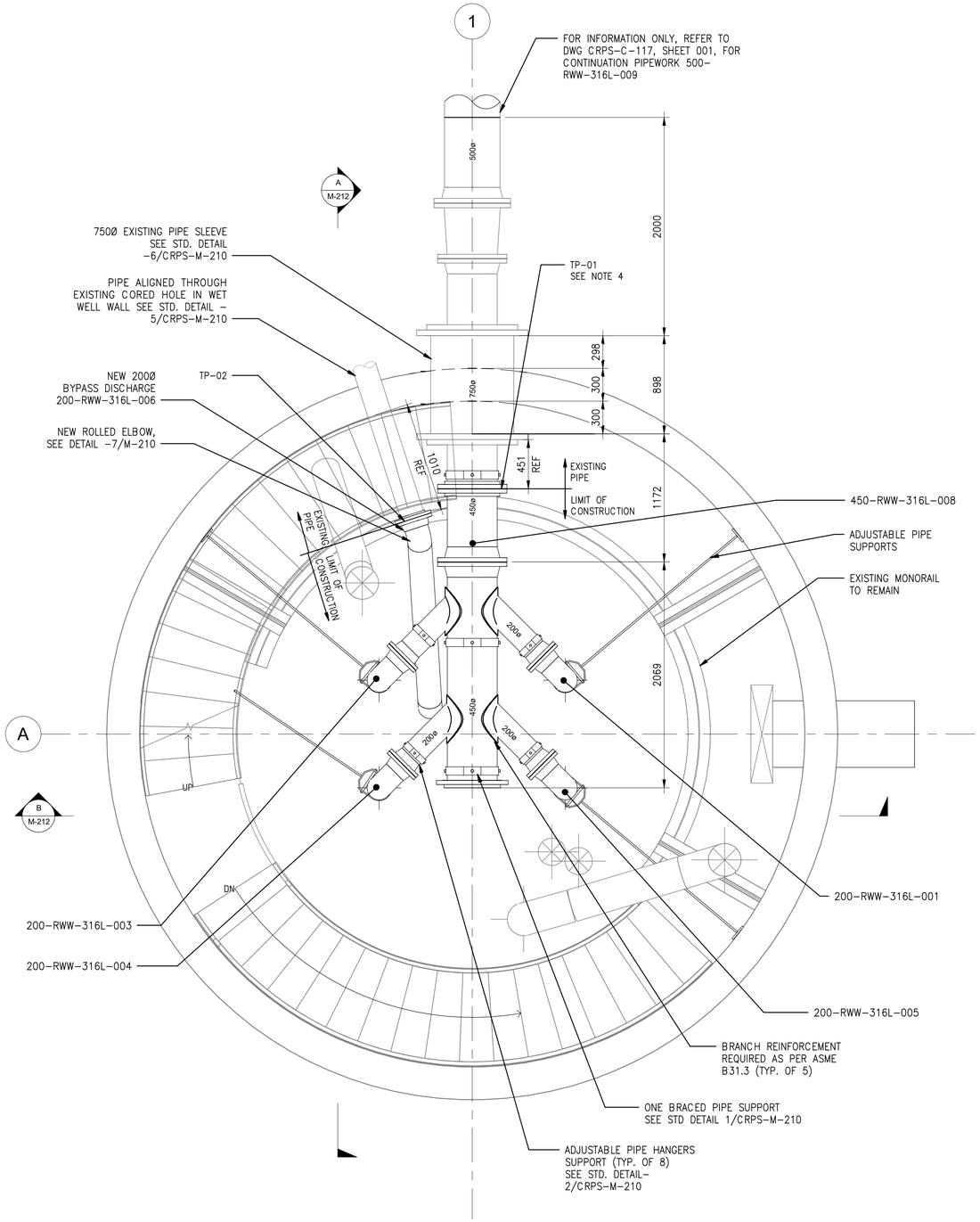

T/O PLATFORM EL. 6.0m

SCALE: 1 : 25

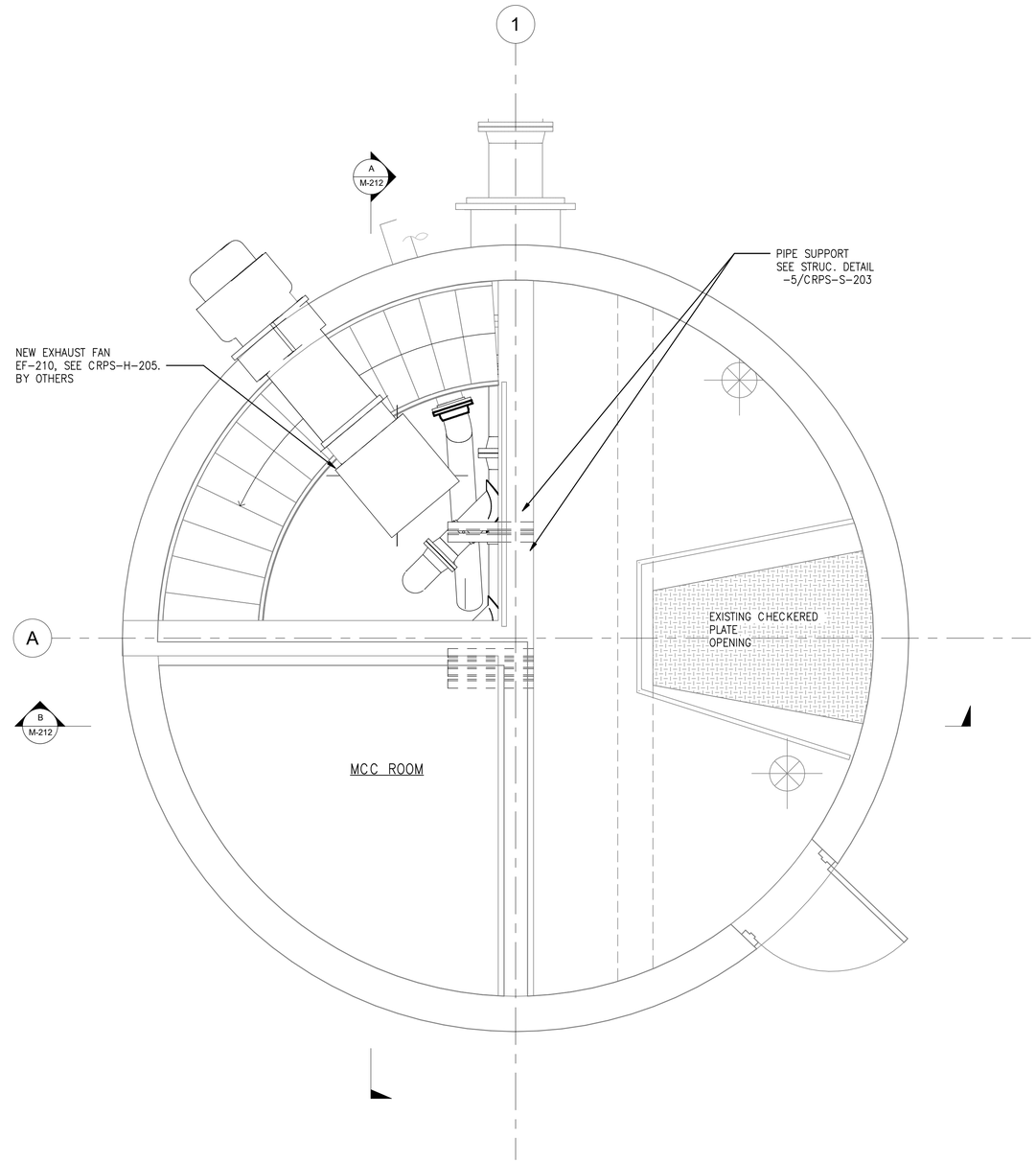

MAIN FLOOR EL. 4.30m

SCALE: 1 : 25

DRAWING NO.	TITLE	REV	DATE	DESCRIPTION	DRN	CHK	APP
		2	JAN 2022	ISSUED FOR CONSTRUCTION	SR	JG	JG
		1	AUG 2021	ISSUED FOR CONSTRUCTION	RY	JG	JG
CRPS-C-117	CHASE RIVER PUMP STATION UPGRADES SITE PLAN	0	JUN 2021	ISSUED FOR CONSTRUCTION	SR	JG	JG

REFERENCE DRAWINGS — REVISION

REGIONAL DISTRICT OF NANAIMO

PROFESSIONAL ENGINEER — PROVINCE OF BRITISH COLUMBIA — J. G. GERWIEN # 213214 — 2022-01-17

PROJECT NAME	CHASE RIVER PUMP STATION UPGRADES			
DRAWN: SR	CHASE RIVER PUMP STATION MECHANICAL FLOOR PLANS		JACOBS	
DESIGNED: CW			PROJECT NO. 707564	SCALE 1 : 25
CHECKED: JG				
APPROVED: JG	DRAWING NUMBER CRPS-M-209	SHEET –	DATE APR 2021	REV 2