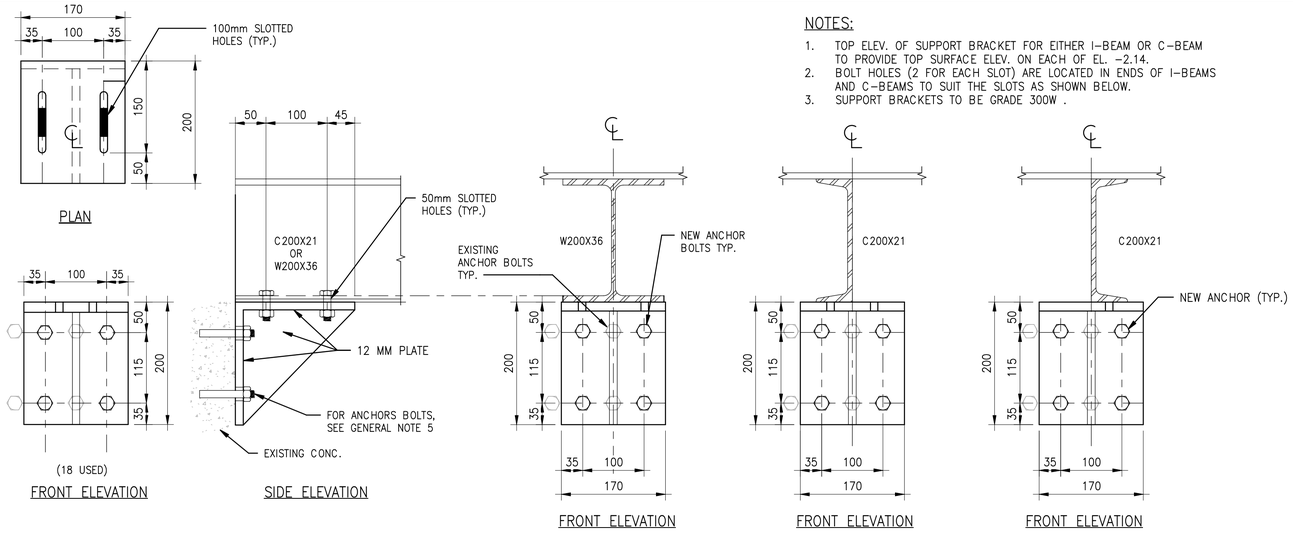

NOTES:

1. TOP ELEV. OF SUPPORT BRACKET FOR EITHER I-BEAM OR C-BEAM TO PROVIDE TOP SURFACE ELEV. ON EACH OF EL. -2.14.
2. BOLT HOLES (2 FOR EACH SLOT) ARE LOCATED IN ENDS OF I-BEAMS AND C-BEAMS TO SUIT THE SLOTS AS SHOWN BELOW.
3. SUPPORT BRACKETS TO BE GRADE 300W .

I-BEAM AND C-BEAM SUPPORT BRACKET (1 / S-202)

FOR NEW ANCHOR BOLT LOCATION

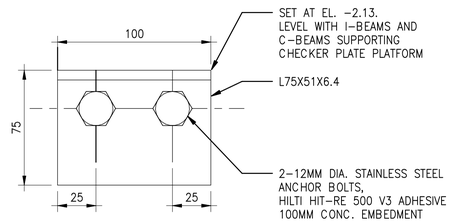

NOTES

1. TOTAL NO. AT EL. -2.14.
2. 2 CENTERED AS SHOWN BETWEEN C-BEAMS AT THE WALL.
3. 1 CENTERED AS SHOWN BETWEEN C & I AT THE WALL.

SUPPORT BRACKET DETAIL (2 / S-202) 1

NOTES:

1. UNLESS NOTED OTHERWISE ALL DIMENSIONS ARE IN MILLIMETERS.
2. DO NOT SCALE DIMENSIONS, IN CASE OF ANY CONFUSION PLEASE CONTACT ENGINEER.

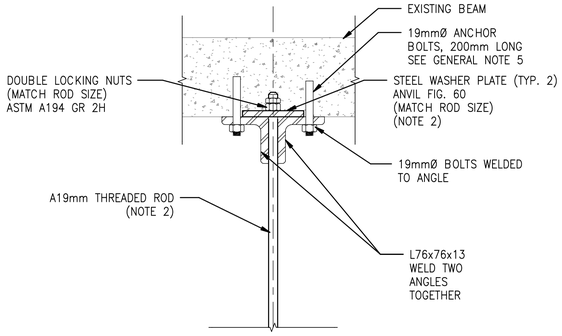

PIPE HANGERS SUPPORTED ON ANGLES (5 / M-209)

SEE DRAWING: CRPS-M-209

M-212

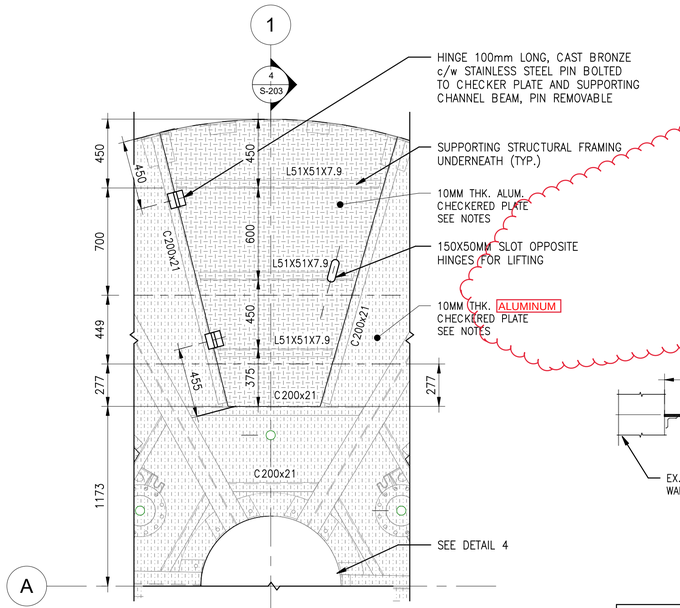

PUMP ACCESS HATCH ON PLATFORM EL. -2.13 (3 / S-202)

NOTES

1. ALL STRUCTURAL SECTIONS TO BE GRADE 350 .
2. CHECKER PLATE IN FIXED AREA: ALUMINUM RAISED AS BELOW
3. CHECKER PLATE IN HINGED OR REMOVABLE AREAS: ALUMINUM RAISED PATTERNS 6061-T TREAD PLATE PER ASTM B632.
4. ALL CONCRETE ANCHORS TO BE 316 STAINLESS STEEL THREADED FULL LENGTH, 200mm MINIMUM EMBEDMENT. INSTALL USING HILTI HIT-RE 500-V3 EPOXY SYSTEM STRICTLY IN ACCORDANCE WITH MANUFACTURER RECOMMENDATIONS.
6. LOCATION OF HINGES TYPICAL, SEE SHEET S-202 FOR CORRECT SIDE OF HATCH.
7. HINGE 100mm LONG, CAST BRONZE c/w STAINLESS STEEL PIN BOLTED TO CHECKER PLATE AND SUPPORTING CHANNEL BEAM, PIN REMOVABLE.
8. ALL CONNECTION COMPONENTS TO BE GRADE 300W.

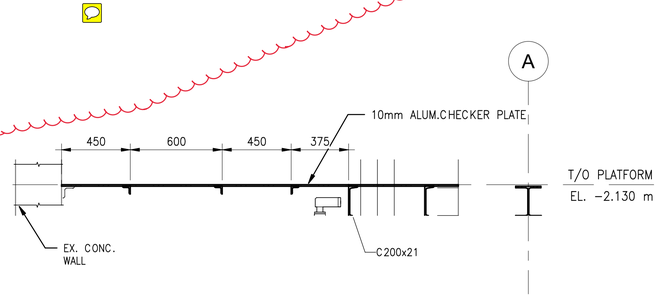

SECTION (4)

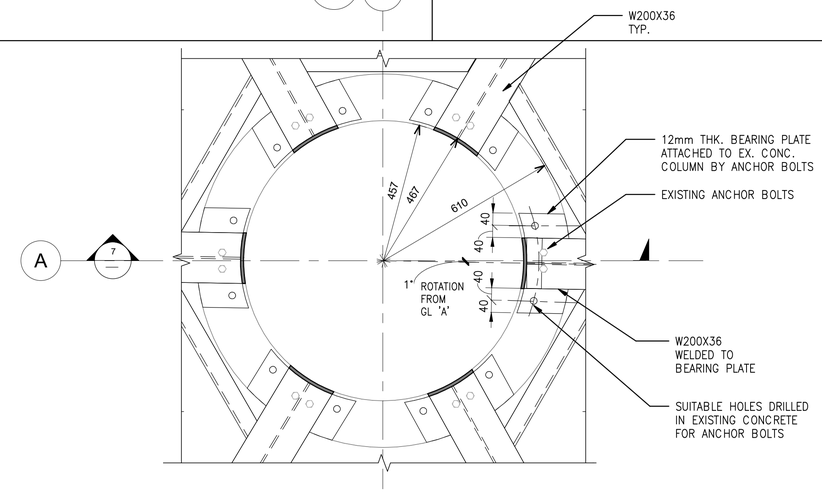

STRU. FRAMING AROUND COLUMN - PLAN (6 / S-202)

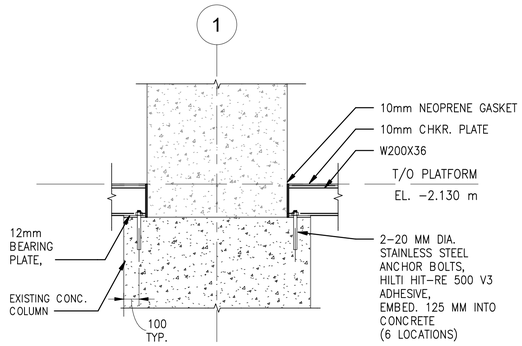

SECTION (7)

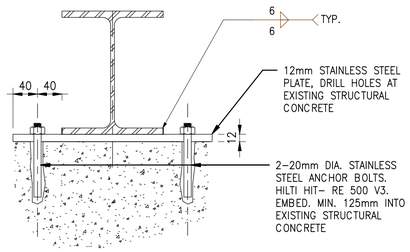

STEEL BEAM TO CONCRETE (8)

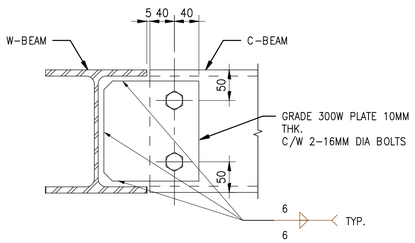

W-BEAM AND C-BEAM (9 / S-202)

DRAWING NO.	TITLE	REV	DATE	DESCRIPTION	DRN	CHK	APP
REFERENCE DRAWINGS		REVISION					
		1	DEC 2021	ISSUED FOR CONSTRUCTION	SR	PT	JG
		0	JUN 2021	ISSUED FOR CONSTRUCTION	SR	PT	JG

REGIONAL DISTRICT OF NANAIMO

PROJECT NAME	CHASE RIVER PUMP STATION UPGRADES		
DRAWN: SR	CHASE RIVER PUMP STATION STRUCTURAL PUMP PLATFORM PLAN AND DETAILS		JACOBS
DESIGNED: ZS			PROJECT NO.: 707564 / SCALE: As indicated
CHECKED: PT			
APPROVED: JG	DRAWING NUMBER: CRPS-S-203	SHEET: -	DATE: APR 2021 / REV: 1