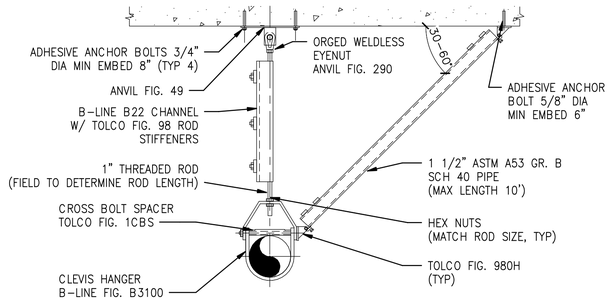

PIPE SUPPORT BRACED CELVIS DETAIL

1 / M-209

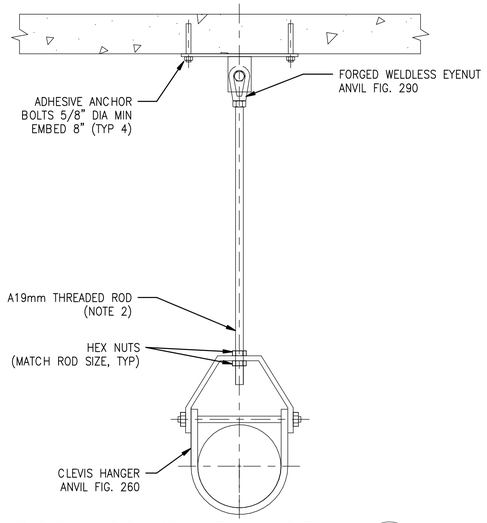

PIPE SUPPORT CELVIS DETAIL

2 / M-209

SEE DETAIL 5 ON CRPS-S-203 FOR SUPPORT ON ANGLES

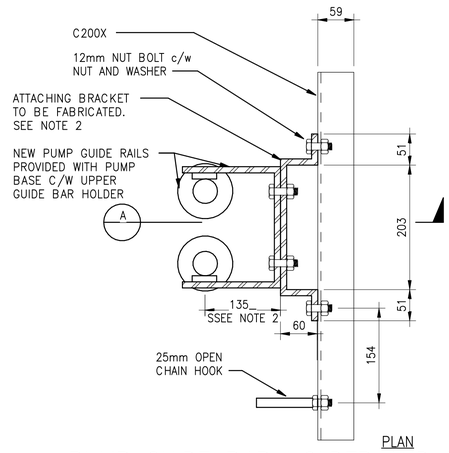

NOTES:
1. ALL DIMENSIONS IN mm UNLESS NOTED OTHERWISE.
2. CONFIRM DIMENSIONS OF UPPER GUIDE BAR SUPPLIED BEFORE FABRICATING ATTACHING BRACKET. BRACKET THICKNESS TO BE 9.52mm (0.375")

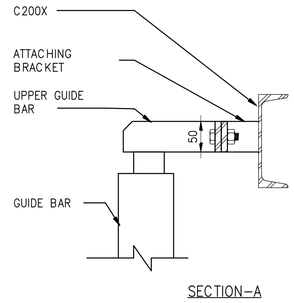

PUMP GUIDE BAR HOLDER AND BRACKET DETAIL

4 / M-212

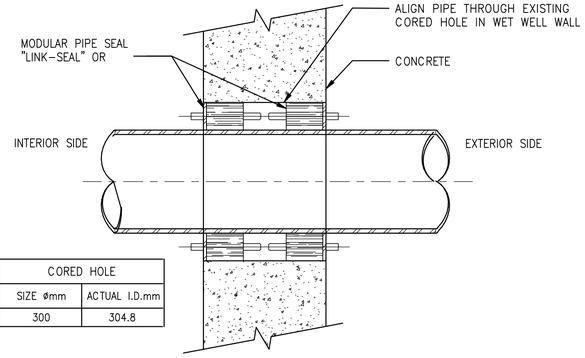

STEEL PIPE		CORED HOLE	
SIZE ØMM	ACTUAL O.D.mm	SIZE ØMM	ACTUAL I.D.mm
200	219.1	300	304.8

BYPASS PIPE SLEEVE DETAIL

5 / M-209

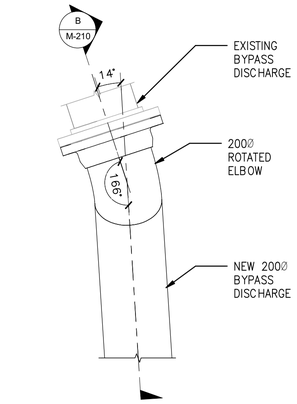

PLAN

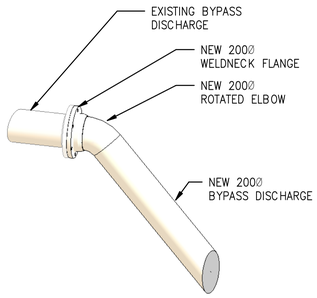

ISOMETRIC VIEW

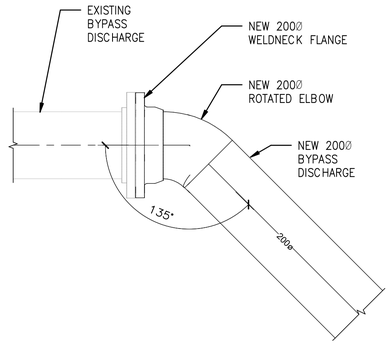

SECTION -B

ROLLED ELBOW DETAIL

7 / M-210

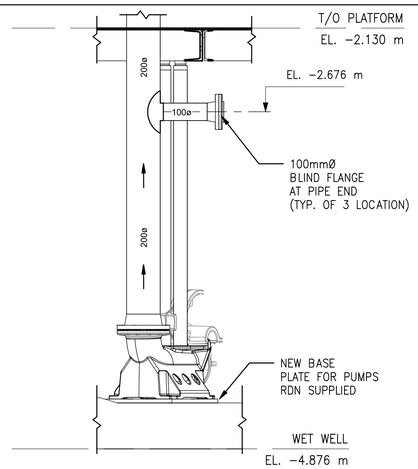

FUTURE WET WELL WASHDOWN PIPE CONNECTION DETAIL

3 / M-208

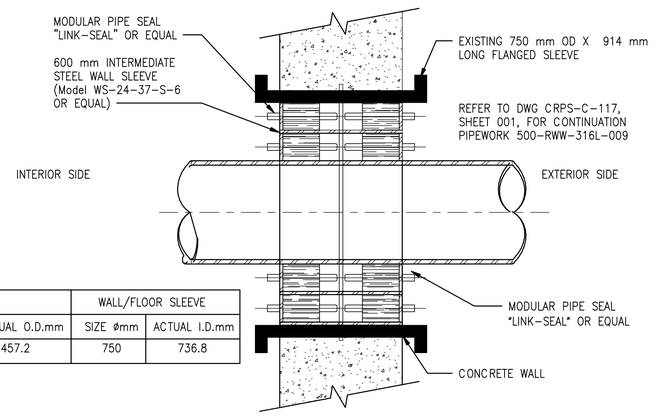

STEEL PIPE		WALL/FLOOR SLEEVE	
SIZE ØMM	ACTUAL O.D.mm	SIZE ØMM	ACTUAL I.D.mm
450	457.2	750	736.8

HEADER PIPE SLEEVE DETAIL

6 / M-209

DRAWING NO.	TITLE	REV	DATE	DESCRIPTION	DRN	CHK	APP
CRPS-M-212	CHASE RIVER PUMP STATION MECHANICAL SECTION AND DETAILS	2	JAN 2022	ISSUED FOR CONSTRUCTION	SR	JG	JG
CRPS-M-209	CHASE RIVER PUMP STATION MECHANICAL FLOOR PLANS	1	AUG 2021	ISSUED FOR CONSTRUCTION	RY	JG	JG
CRPS-M-208	CHASE RIVER PUMP STATION MECHANICAL FLOOR PLANS	0	JUN 2021	ISSUED FOR CONSTRUCTION	SR	JG	JG

REFERENCE DRAWINGS — REVISION

REGIONAL DISTRICT OF NANAIMO

PROFESSIONAL ENGINEER — PROVINCE OF BRITISH COLUMBIA — J. G. GERWIEN # 213214 — 2022-01-17

PROJECT NAME	CHASE RIVER PUMP STATION UPGRADES
DRAWN	SR
DESIGNED	CW
CHECKED	JG
APPROVED	JG
	CHASE RIVER PUMP STATION MECHANICAL STANDARD DETAILS
DRAWING NUMBER	CRPS-M-210
SHEET	–
PROJECT NO.	707564
SCALE	As indicated
DATE	APR 2021
REV	2

JACOBS