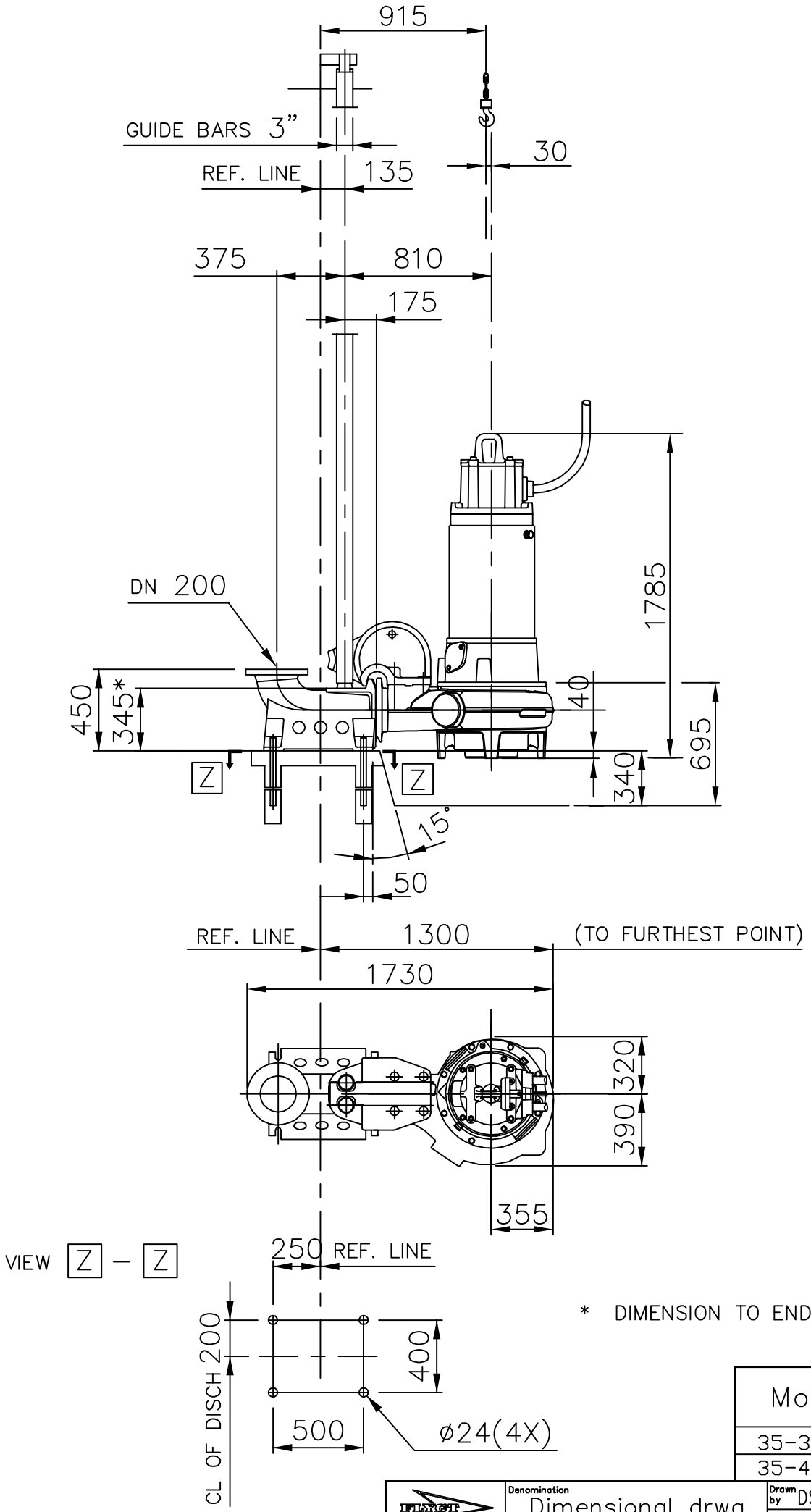

* DIMENSION TO ENDS OF GUIDE BARS

Motor	Weight (kg)	
	Pump	Disch
35-35-XX	1380	125
35-45-XX	1410	125

FLYGT AUTOCAD DRAWING	Denomination: Dimensional drwg CP,NP 3231 665/675 DN 200	Drawn by DS	Checked by	Date 120914
		Scale 1:30		Reg no 5399
		6218700		8